Mounting Instructions
With Parts Listing and Drawings
For

FREDRICKS FAMILY 10

2-POST FOLDING ROLLBAR

Part No.

A-11450

Manufactured by:

CUSTOM PRODUCTS OF LITCHFIELD, INC.

BOX 718 • LITCHFIELD, MINNESOTA 55355
Ph: (320) 693-3221 Fax: (320) 693-7252
1-800-222-5463
www.800cabline.com

05-10615
JULY 14, 2006

INSTALLATION INSTRUCTIONS FOR ROLLOVER PROTECTION SYSTEM (ROPS)

This manual contains assembly, operating, maintenance and safety instructions for your ROPS. Before Installing the ROPS or operating a machine equipped with a ROPS, carefully read these instructions completely. The ROPS will reduce the risk of serious or fatal injury in the unlikely event of a tip over although the system cannot protect the operator from all possible injuries. By following the operating, maintenance, and safety instructions, you will prolong the life of the machine and the ROPS, maintain its maximum efficiency and promote safe operation.

If additional information is needed, contact your authorized equipment dealer or distributor. **Keep this manual with the operator's manual for the machine for future reference.**

IMPORTANT:

1. **Do not cut, drill, modify or repair ROPS in any manner.**
2. **Always replace a damaged ROPS.**
3. **Always use the seatbelt and ROPS together.**
4. **Frequently inspect rollbar and seat belts for damage or loose hardware.**
5. **Use extreme care when working close to fences, ditches, trees and on hills.**
6. **Check overhead clearances carefully before driving under any objects.**
7. **Do not leave operator's position while unit is running.**
8. **Do not carry riders.**

WARNING!

This ROPS is certified for use on machines with a maximum gross vehicle weight (GVW) of 4,000 LB. The GVW INCLUDES the weight of the base machine, operator, fuel, ROPS, and other attachments and payloads. When attachments are added, causing the GVW of the machine to be more than 4,000 LB., the ROPS may not provide adequate protection resulting in serious injury or death. Use caution when installing attachments and **DO NOT EXCEED** the GVW rating of the ROPS.

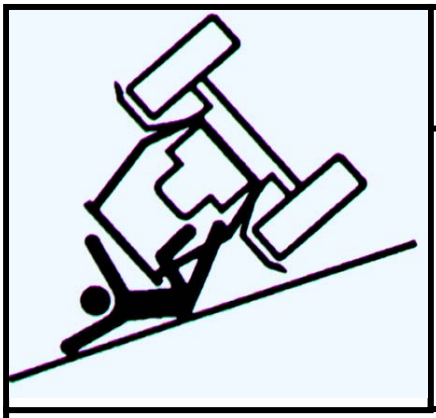

WARNING!

SERIOUS INJURY OR DEATH MAY RESULT FROM MACHINE ROLLOVER

- DO NOT OPERATE MACHINE ON STEEP SLOPES OR NEAR DROP OFFS
- ALWAYS USE SEAT BELTS
- AVOID SHARP AND/OR QUICK TURNS
- DO NOT EXCEED THE MACHINE WEIGHT RATING OF THE ROPS

WARNING

ROLLOVER MAY CAUSE PERMANENT INJURY OR DEATH.

- ROPS RAISES THE CENTER OF GRAVITY AND REDUCES STABILITY ON SLOPES.
- SUDDEN STARTS OR TURNS ON RAMPS OR SLOPES CAN CAUSE OVERTURN.
- USE GREATER CARE ON RAMPS AND AS THE SLOPE INCREASES.

MOUNTING INSTRUCTIONS
2-Post Folding Rollbar A-11450 Family 10

Machine Preparation

1) Park the tractor on a level surface, set the brakes and remove rear tires.

Lower ROPS Leg Weldment Installation (Refer to Figure 1 for Steps 2-5)

2) Tighten all mounting hardware later step 7.

3) Locate the bolt reliefs on each side of the rear axle casting. Align lower leg weldment with bolt bosses on axle each side of axle. Secure using (6) ½-13unc x 6.00 long grade 5 bolts, (14) ½" flat washers and (8) ½-13unc center lock nuts, supplied with the ROPS hardware kit.

FIGURE 1

Upper Hoop Installation (Refer to Figure 2 for Steps 6-9)

4) Install the upper rollbar hoop. Secure each side of hoop with a ½-13unc x 3.00 grade 5 bolt, a pin retainer washer and a ½-13unc grade 5 center-lock nut into the upper mount hole. Tighten only until the nut contacts the bracket. Do not over tighten. Hoop should pivot freely, up and down. See Figure 2.

5) Install (1) EPDM washer onto each of the hitch pins. Position the top hoop into the up-right location and install the hitch pins. See Figure 2.

6) Attach (1) plastic lanyard to the handle of each hitch pin. Insert one end of the lanyard though the retaining washer and attach the spring pin to the eye in the lanyard. Install the spring pins into the hitch pins.

7) Tighten lower ROPS legs hardware at this time.

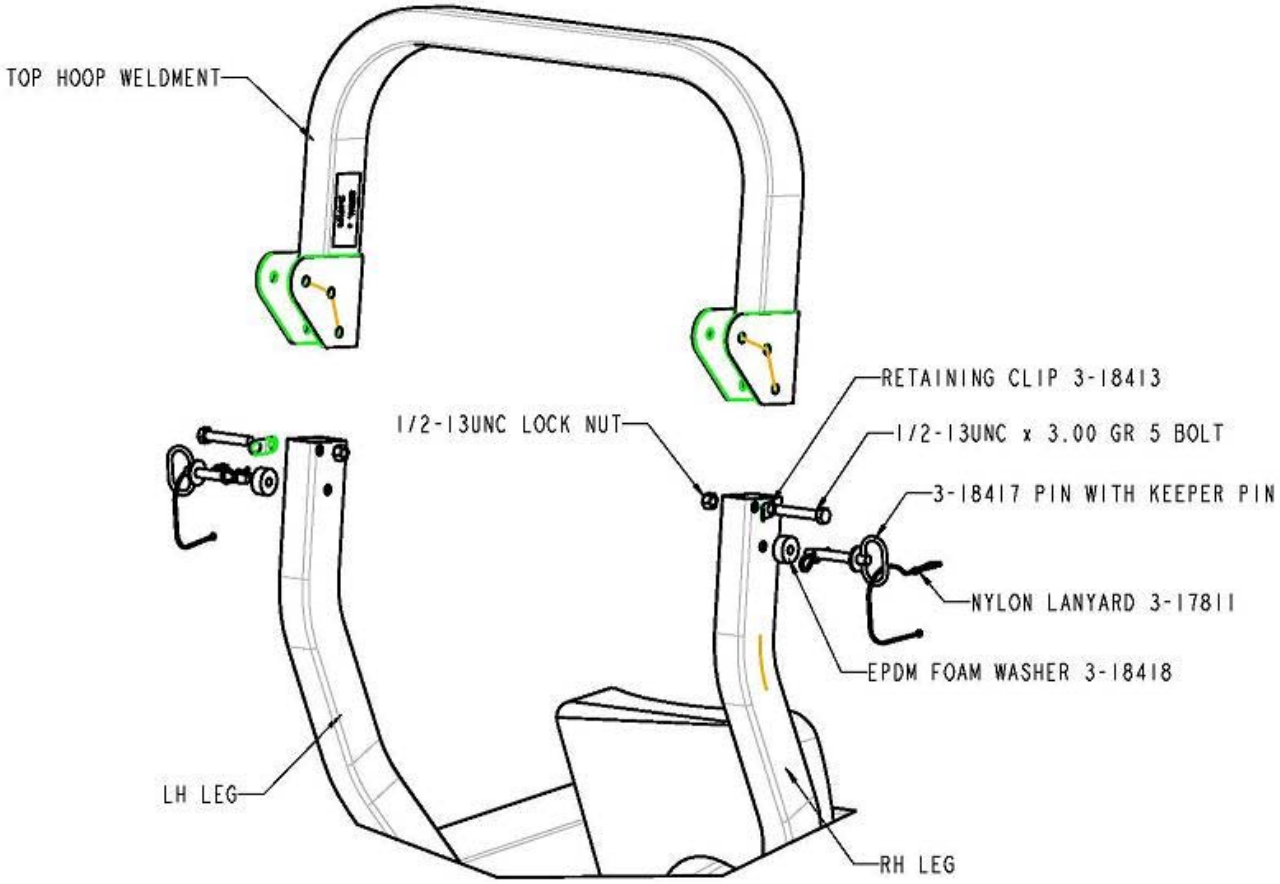

FIGURE 2

Seatbelt Installation (Refer to Figures 3 & 4)

8) Install LH and RH fender support brackets by removing the rear outer nut and bolt. Secure the bracket onto the ROPS upper plate and re-install nut and bolt. See Figures 3 & 4.

9) Align top bracket hole with a predrilled hole in fender. Secure using (2) 5/16-18unc x 1.25 grade 5 bolts, (4) 5/16" flat washers and (2) 5/16-18unc grade 5 nylock nuts. See figures 4.

10) Measure up 12-1/2" from bottom of fender and drill (1) 1/2" diameter hole through each fender and flange channel as shown in Figure 4.

11) Install the seat belt to each fender using (2) 7/16-14unc x 1.25 grade 5 bolts, (4) 7/16" flat washers and (2) 7/16-14unc grade 5 nylock nuts.

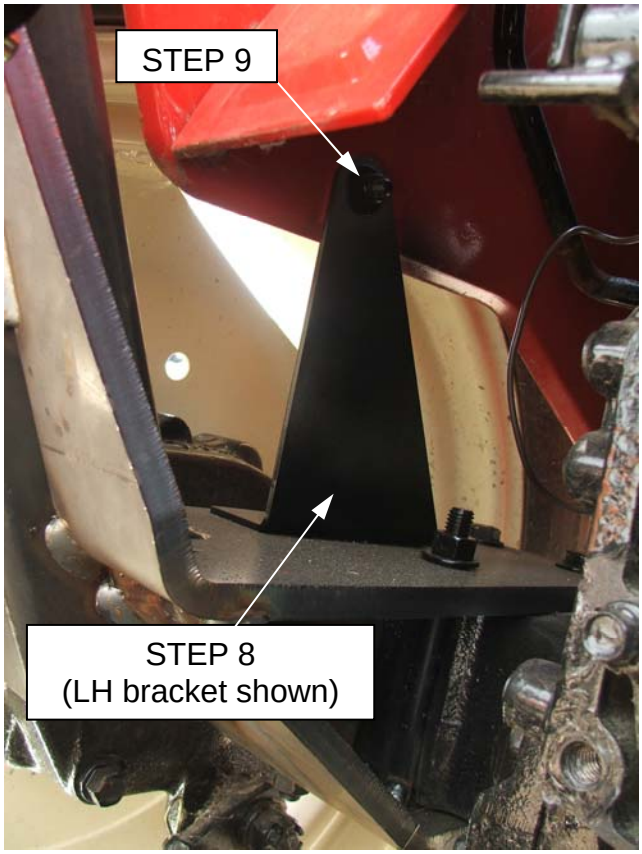

FIGURE 3

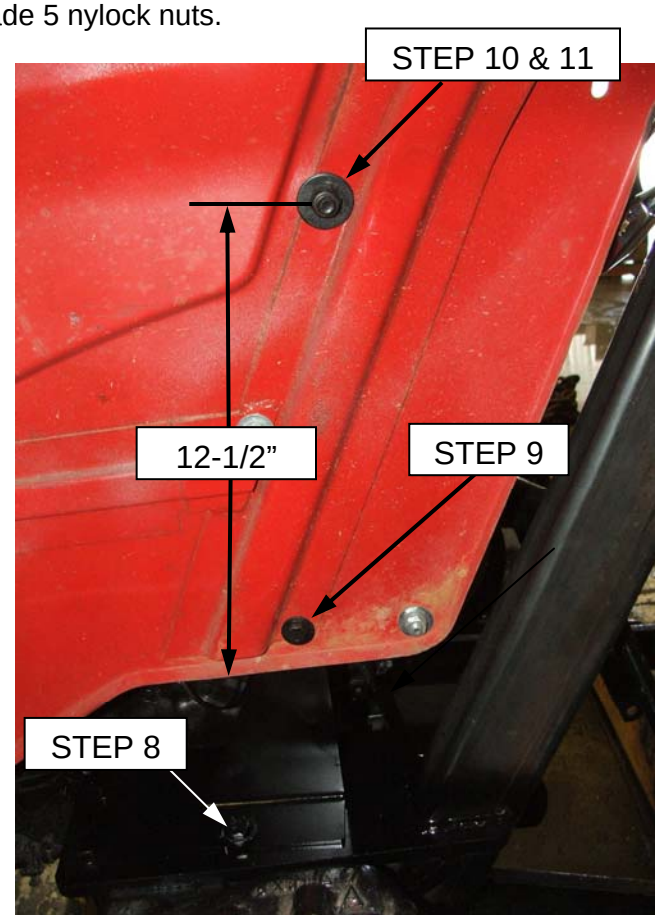

FIGURE 4

FIGURE 5
(RH Shown)

FIGURE 6
(LH Shown)

REV.	DCR NO.	DESCRIPTION	DRAFTSMAN	DATE
-	-	-	-	7-13-06

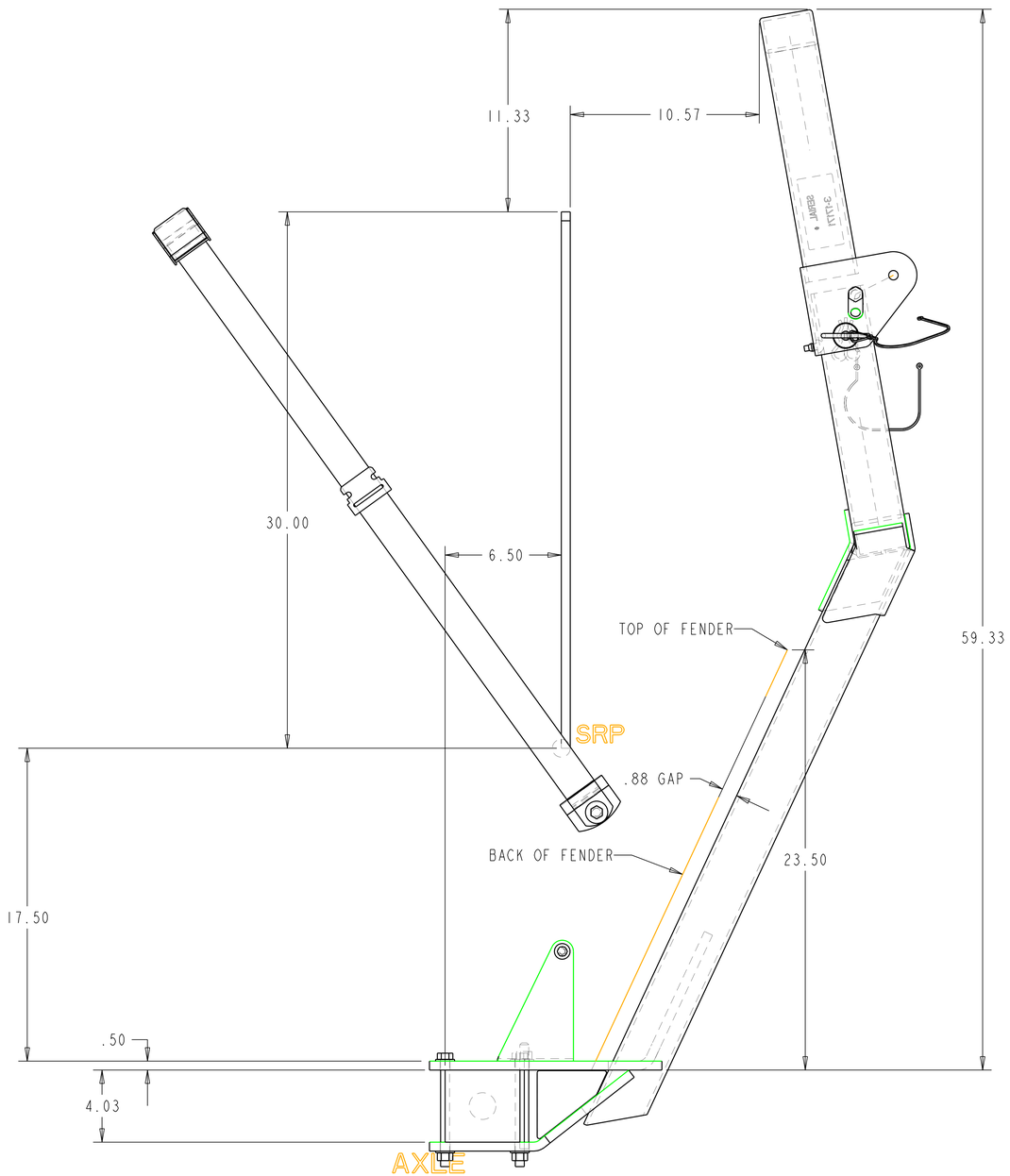

SCALE 0.250

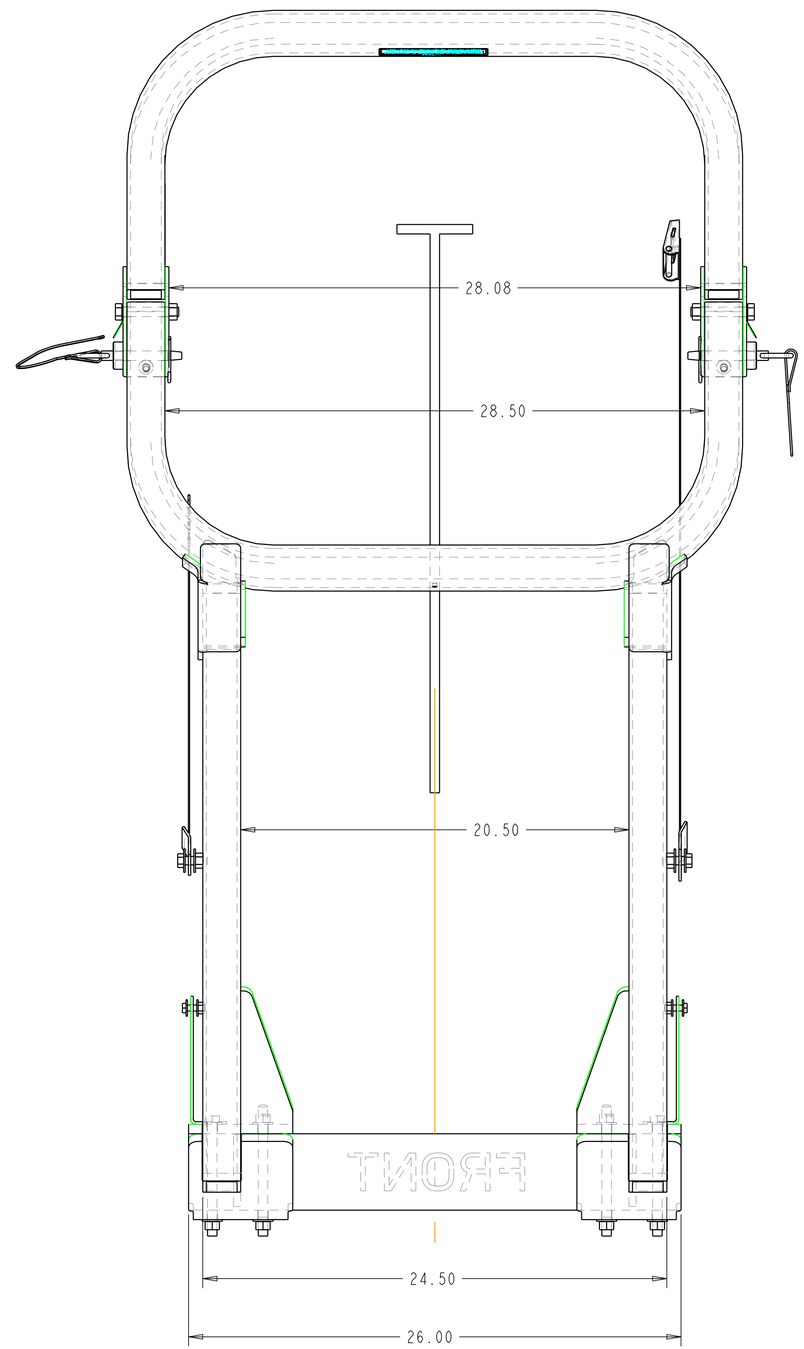

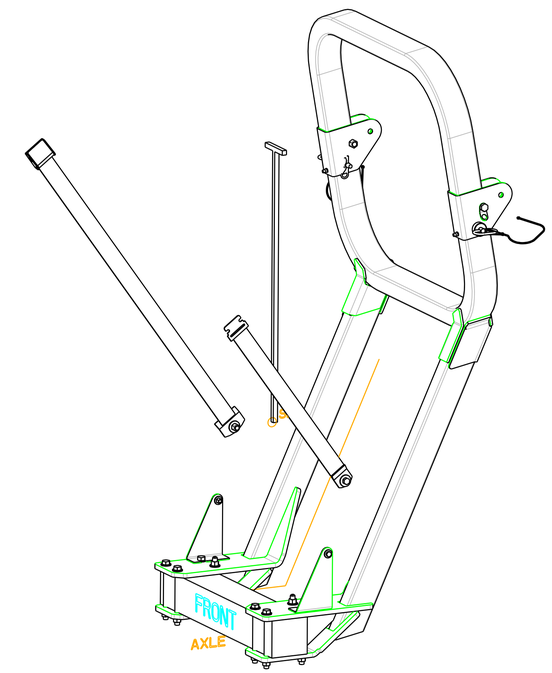

SCALE 0.125

ITEM #	DESCRIPTION	QTY
1	AXLE	1
2	REF_T	1
3	2-16145_LOWER_WELDMENT	1
4	4-15069_HARDWARE_KIT	1
5	4-15012_UPPER_HOOP_ASM	1
6	3-17913_PAINT_BLK_POWDER_24	SEE BOM

MACHINE TEST WEIGHT =4,000 LBS
UPPER HOOP WEIGHT =32 LBS
LOWER LEG WELDMENT =107 LBS
TOTAL ROPS WEIGHT =139 LBS

THIS DOCUMENT CONTAINS CONFIDENTIAL INFORMATION AND IS THE PROPERTY OF CUSTOM PRODUCTS OF LITCHFIELD, INC. AND MAY NOT BE COPIED, REPRODUCED OR DISCLOSED IN ANY MATTER WITHOUT EXPRESSED WRITTEN CONSENT FROM CUSTOM PRODUCTS OF LITCHFIELD, INC.

TOLERANCES UNLESS NOTED OTHERWISE
X ± .09
XX ± .06
XXX ± .03
HOLE SIZE (DEF/.00)
ANGLE ± .5°

CUSTOMER NAME & MOD NO.: A-11450 FREDRICKS FAM 10

CUSTOM PRODUCTS
1715 SOUTH SIBLEY AVE.
LITCHFIELD, MN 55355

MATL SPEC.

TITLE: 2-POST FOLDING ROPS

DRWG SIZE: D

DRWG NO.: A-11450
1 of 1

REV LEVEL: -

DRAWN: CAD

DATE: 6-14-06

REV.	DCR NO.	DESCRIPTION	DRAFTSMAN	DATE
A	-	BUMPER 3-18480 WAS 3-14595	CAD	2-13-06
B	-	ADDED FREDRICKS FAM 10	CAD	7-13-06

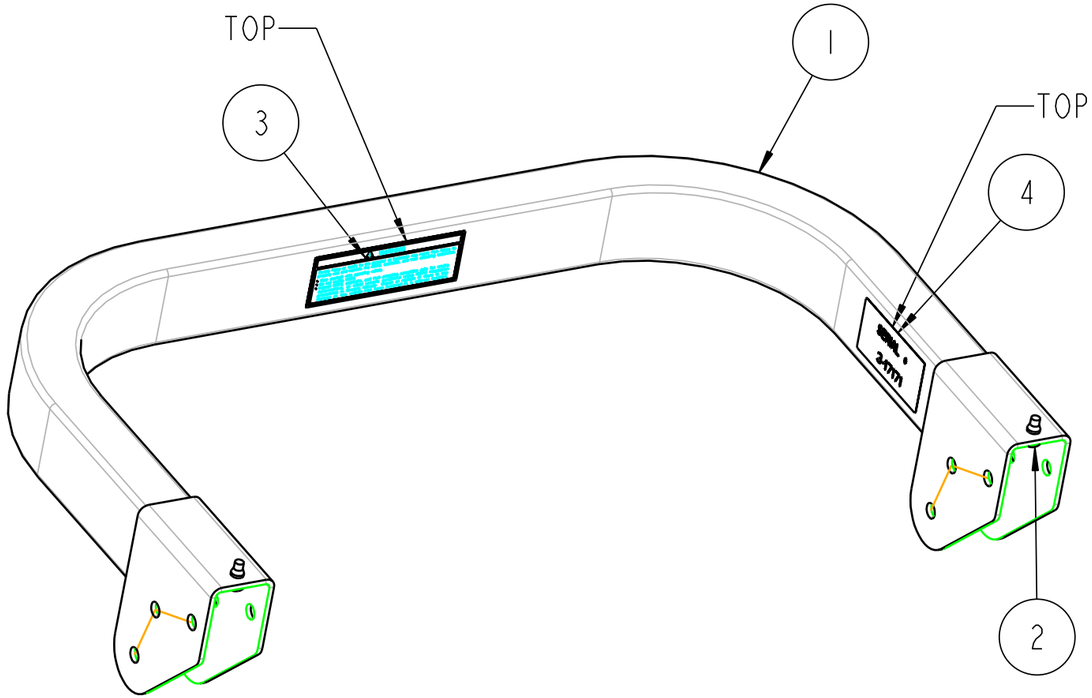

SCALE 0.200

ID NUMBER	CUSTOMER-MODEL	QTY REQ'D
A-11381	FREDRICKS FAM 8	1
A-11383	FREDRICKS FAM 9	1
A-11450	FREDRICKS FAM 10	1

ITEM #	DESCRIPTION	QTY
1	2-16049_UPPER_HOOP_WELDMENT	1
2	3-18480_RUB_BUMPER_W_FLANGE	2
3	3-17891_WARNING_DECAL	1
4	3-17171_DECAL_CP_SERIAL_NUMBER	1

THIS DOCUMENT CONTAINS CONFIDENTIAL INFORMATION AND IS THE PROPERTY OF CUSTOM PRODUCTS OF LITCHFIELD, INC. AND MAY NOT BE COPIED, REPRODUCED OR DISCLOSED IN ANY MATTER WITHOUT EXPRESSED WRITTEN CONSENT FROM CUSTOM PRODUCTS OF LITCHFIELD, INC.

TOLERANCES UNLESS NOTED OTHERWISE
.X ± .09
.XX ± .06
.XXX ± .03
HOLE SIZE
+.015/-.010
ANGLE ± .5°

CUSTOMER NAME & MOD NO.: SEE LEGEND

CUSTOM PRODUCTS 1715 SOUTH SIBLEY AVE. LITCHFIELD, MN 55355

MATL SPEC:

TITLE: TOP HOOP ASM

DRWG SIZE: B

DRWG NO.: 4-15012

REV LEVEL: B

DRAWN: CAD

DATE: 8-24-05

REV.	DCR NO.	DESCRIPTION	DRAFTSMAN	DATE
A	-	ADDED ITEMS 9 THRU 18	CAD	07-13-06

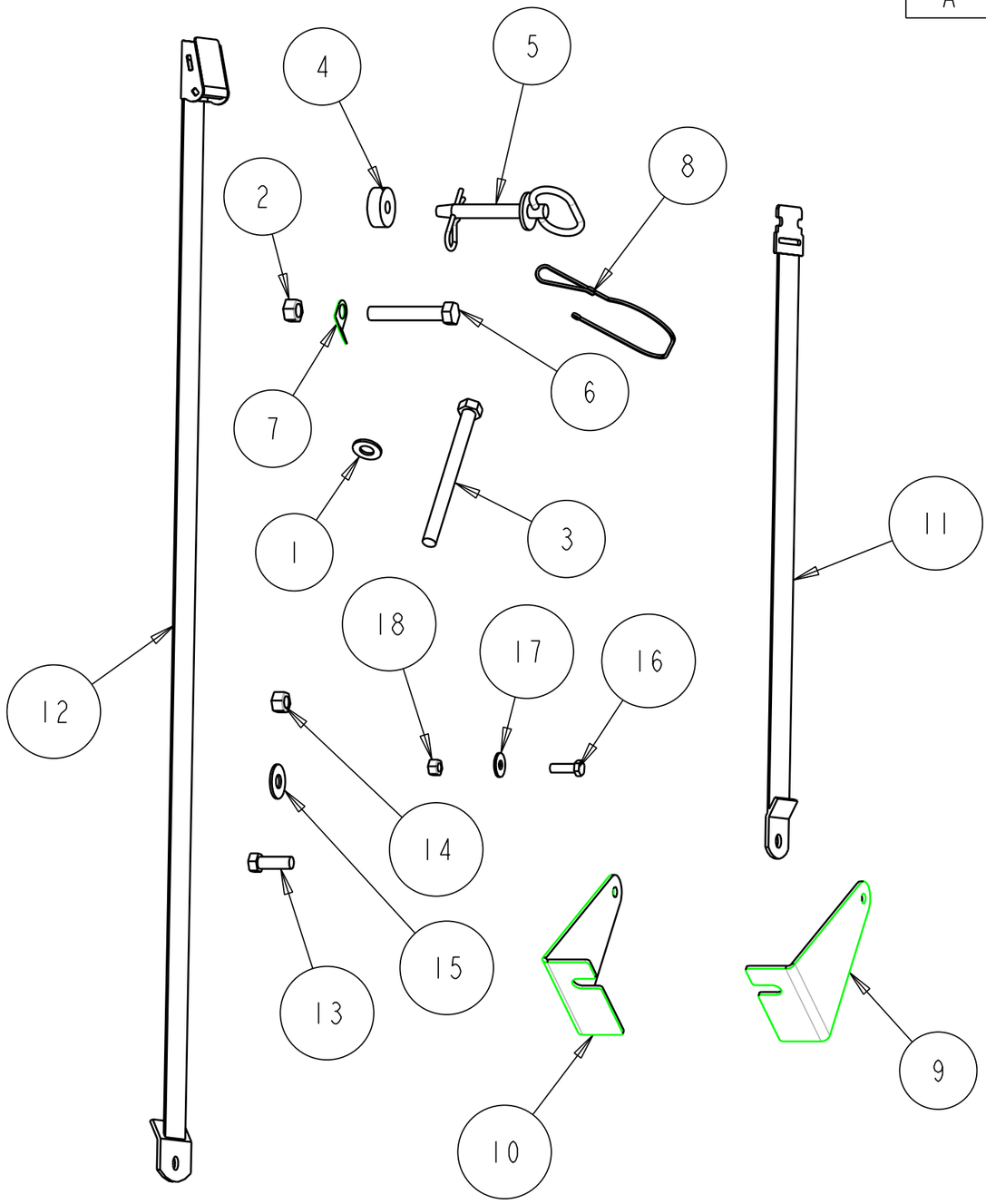

ITEM #	DESCRIPTION	QTY
1	3-12466_WASHER_50_TYPE_A_N	14
2	3-10485_50_NUT_HEX_CNTRLOCK	10
3	3-11739_50_HHCS_X600	6
4	3-18418_WASHER_EPDM_500	2
5	3-18417_HITCH_PIN_500	2
6	3-10131_50_HHCS_X300	2
7	3-18413_WASHER_FORMED_RETAIN_50	2
8	3-17811_LANYARD_NYLON_180_LOOP	2
9	1-44835_SUPPORT_BRACKET_LH	1
10	1-44834_SUPPORT_BRACKET_RH	1
11	3-10287_SEAT_BELT_1	1
12	3-10287_SEAT_BELT_2	1
13	3-10026_44_HHCS_X125	2
14	3-10472_4375_NYLOCK	2
15	3-10166_4375_WASHER	4
16	3-10228_313_HHCS_X100	2
17	3-10085_3125_WASHER	4
18	3-10072_3125_NYLOCK	2

QTY =1 PER ASM

THIS DOCUMENT CONTAINS CONFIDENTIAL INFORMATION AND IS THE PROPERTY OF CUSTOM PRODUCTS OF LITCHFIELD, INC. AND MAY NOT BE COPIED, REPRODUCED OR DISCLOSED IN ANY MATTER WITHOUT EXPRESSED WRITTEN CONSENT FROM CUSTOM PRODUCTS OF LITCHFIELD, INC.

TOLERANCES UNLESS NOTED OTHERWISE

.X ± .09
.XX ± .06
.XXX ± .03
HOLE SIZE +.015/-.010
ANGLE ± .5°

CUSTOMER NAME & MOD NO: FREDRICKS FAM 10

CUSTOM PRODUCTS 1715 SOUTH SIBLEY AVE. LITCHFIELD, MN 55355

MATL SPEC:

TITLE: HARDWARE KIT

DRWG SIZE: B

DRWG NO.: 4-15069

REV LEVEL: A

DRAWN: CAD

DATE: 6-21-06